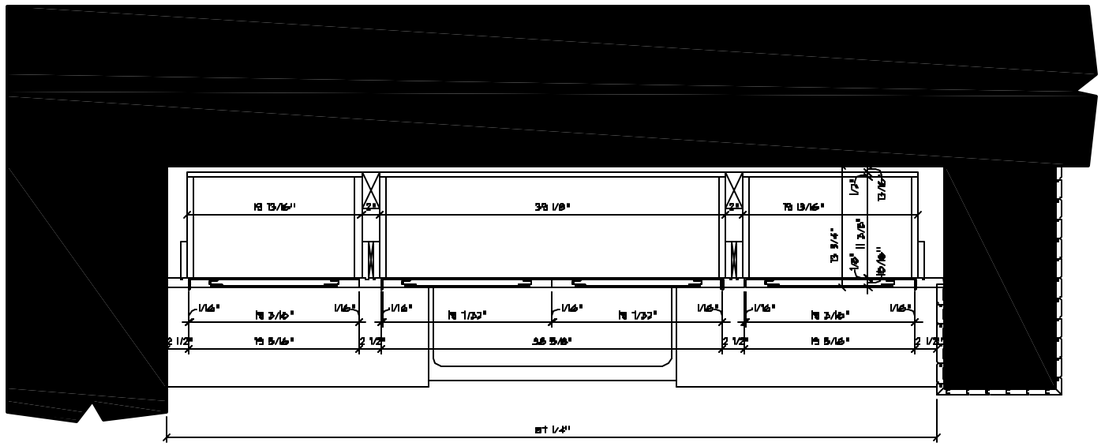

1 UPPER PLAN SECTION
SCALE: 1 1/2" = 1' - 0"

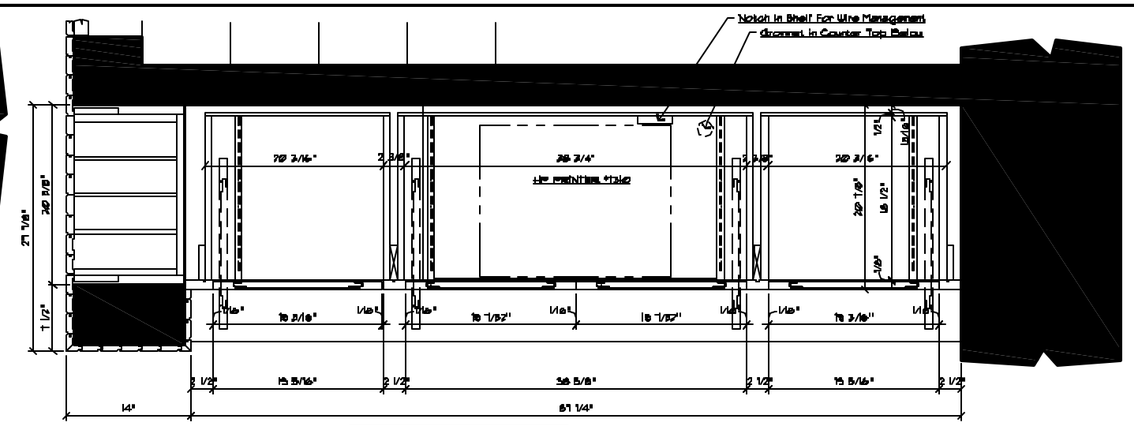

3 MIDDLE PLAN SECTION
SCALE: 1 1/2" = 1' - 0"

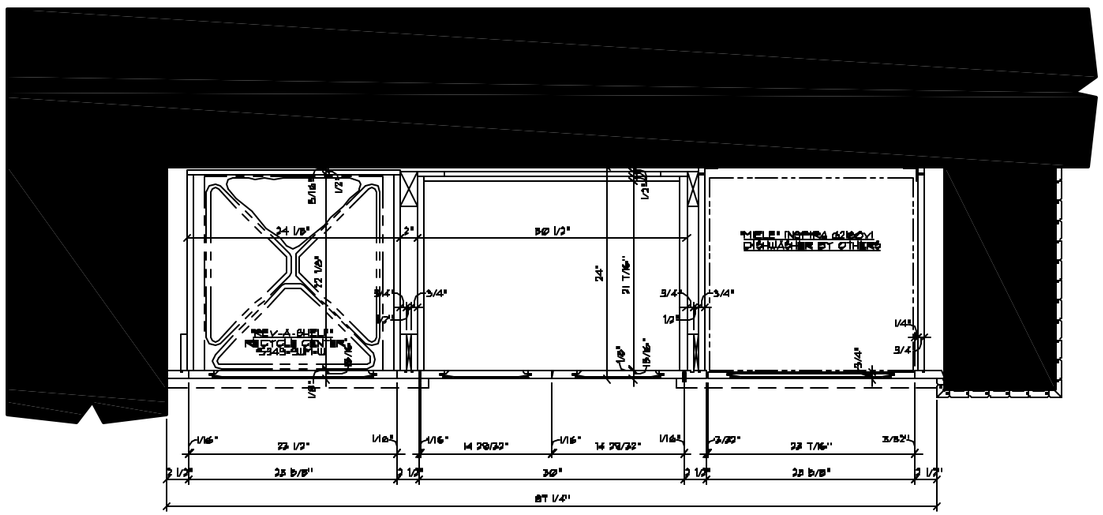

2 LOWER PLAN SECTION
SCALE: 1 1/2" = 1' - 0"

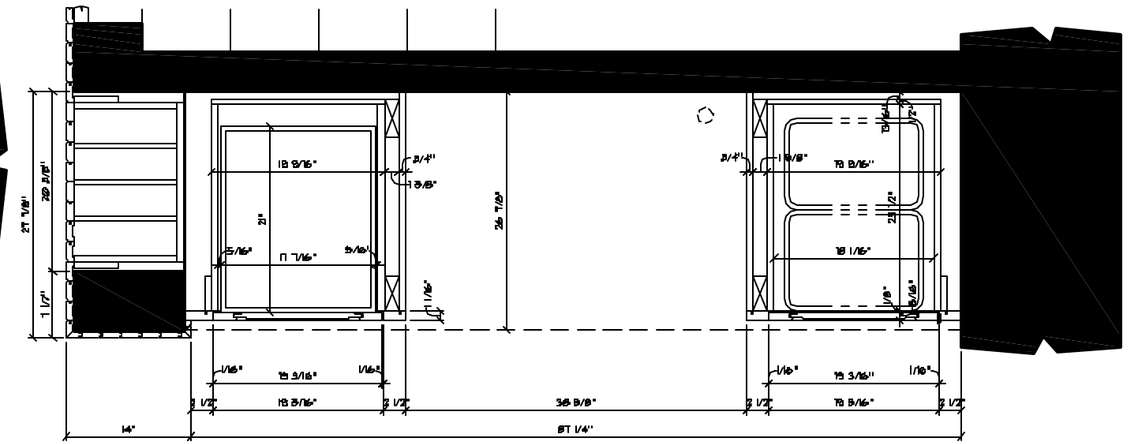

4 LOWER PLAN SECTION
SCALE: 1 1/2" = 1' - 0"

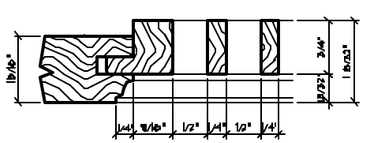

5 F.S. DETAIL
PANEL GRILLE

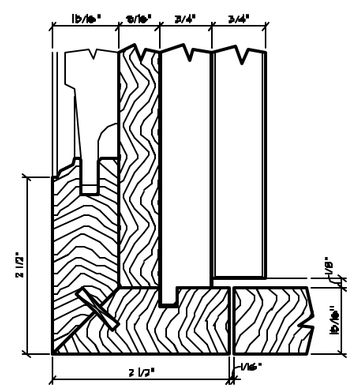

6 F.S. DETAIL
FACE FRAME

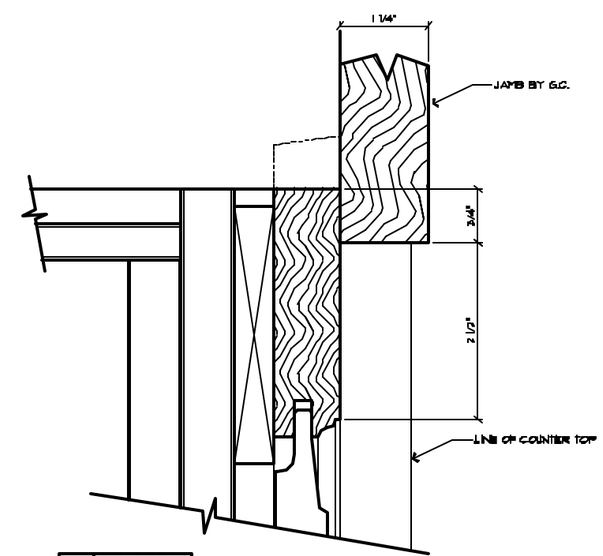

7 F.S. DETAIL
JAMB DETAIL

	06-23-06	REV PER ARCH. REDLINES

ARCHITECT / DESIGNER:

CONTRACTOR:

PROJECT:

DRAWING TITLE: Kitchen, Pantry, & Home Office

635 MAPLE AVE.
HANOVER, PA 17331
PHONE 717/630-0600
FAX 717/630-0601

06-8-06

AS NOTED

06-2294

1.5